AIE900-902-FL NEW

Fanless Edge AI System with NVIDIA® Jetson AGX Xavier™ SoM, 2 HDMI, 2 GbE LAN, 4 GbE PoE, 6 USB, 2 COM or 2 CAN and 8-CH DI/DO

Features

- NVIDIA® Jetson AGX Xavier™ with 512-core Volta GPU with 64 Tensor cores GPU
- High AI computing performance for GPU-accelerated processing
- Ideal for intelligent edge applications, AGV, AMR and computer vision
- Supports M.2 NVMe PCIe x4 SSD slot
- Wide operating temperature from -30°C to +50°C
- JetPack supported

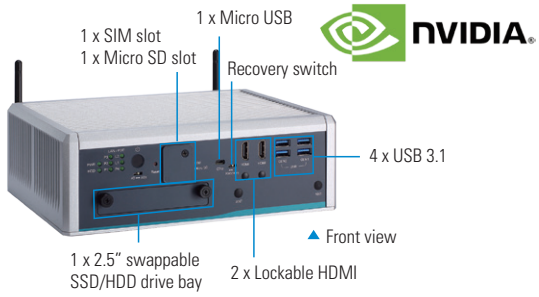

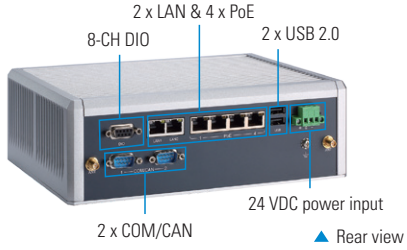

NVIDIA® Jetson AGX Xavier™ available through to 2025
The official end of life notice will be sent for at least 8 months before the last shipment.

IP40 | Fanless | Low Power | DDR4 | 4K Ultra HD | 24 VDC | AGX Xavier

Specifications

Standard Color	Silver
Construction	Aluminum extrusion and heavy-duty steel, IP40
CPU Board	NVIDIA® Jetson AGX Xavier™
CPU	8-core Carmel ARM® v8.2 64-bit CPU, 8MB L2 + 4MB L3
GPU	512-Core NVIDIA Volta™ GPU with 64 Tensor Cores
System Memory	1 x 32GB 256-Bit LPDDR4x onboard
Carried Board	SBC87902
System I/O Outlet	2 x Lockable HDMI 2.0 with 4K2K supported 2 x 10/100/1000 Mbps Ethernet (Intel® i210-IT) 4 x 10/100/1000 Mbps PoE (Intel® i210-IT) 2 x USB 3.1 Gen2, 2 x USB 3.1 Gen1, 2 x USB 2.0 1 x Micro USB 1 x 8-CH DI/DO 2 x RS-232 default (or 2 x CAN by jumper settings) 1 x 24 VDC power input connector 4 x SMA-type antenna connector
Watchdog Timer	Built-in AGX Xavier
Storage	Onboard 32GB eMMC (via Jetson AGX Xavier™) 1 x M.2 Key M 2280 with PCIe x4 NVMe SSD slot 1 x Micro SD slot 1 x 2.5" SSD/HDD drive bay *The bootable device supported by eMMC only
Expansion Interface	1 x Full-size PCI Express Mini Card slot (USB + PCI Express signal) 1 x M.2 Key E 2230 slot 1 x SIM slot
System Indicator	1 x Green LED for system power-on 1 x Green LED for M.2 storage 2 x Green LED for LAN status 4 x Green LED for PoE status
Power Supply	24 VDC
Operating Temperature	-30°C to +50°C (-22°F to +122°F)
Humidity	10% - 95%, non-condensing
Vibration Endurance	3 Grms with M.2 SSD (5 to 500Hz, X, Y, Z directions)
Dimensions	239 mm (9.41") (W) x 185.3 mm (7.3") (D) x 79.4 mm (3.13") (H)
Weight (net/gross)	2.8kg (6.17lb)/3.45kg (7.61lb)
Certifications	CE, FCC Class A
OS Support	Linux Ubuntu 18.04

Packing List

1 x Terminal block connector
1 x Screw pack
4 x Foot pad
1 x M.2 SSD thermal kit

Updated Jul. 23, 2021.

Power Protection

DC Version
OVP (over voltage protection)
OCP (over current protection)
UVP (under voltage protection)
Reserve protection

Ordering Information

Standard	
AIE900-902-FL	Fanless edge AI system with NVIDIA® Jetson AGX Xavier™ SoM, 2 HDMI, 2 GbE LAN, 4 GbE PoE, 6 USB, 2 COM or 2 CAN and 8-CH DI/DO

Optional
Wall mount kit
DIN-rail kit
VESA mount kit
M.2 NVMe SSD 128GB or above
2.5" SATA SSD 128GB or above
LTE module kit
Wi-Fi module kit
24V/230W adapter
Power cord

* Specifications and certifications may vary based on different requirements.

Dimensions

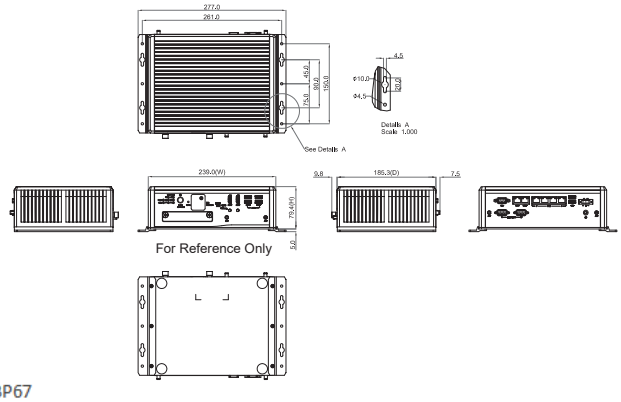

IP SYSTEMES
8 rue du Colonel Chambonnet – BP67
69672 BRON Cedex
Tel. : 04 72 14 18 00
Fax : 04 72 14 18 01
www.ip-systemes.com – info@ip-systemes.fr